TWINPICK RACKS

WAREHOUSE MATERIAL FLOW

Conveyors & Transport

Cartons, totes, pallets, and loose product move more efficiently on a conveyor line chosen for your throughput, handling needs, floor plan, and automation targets.

8
CONVEYOR TYPES



CONVEYORS & TRANSPORT

Conveyors Matched to How Product Actually Moves

Every high-performing warehouse comes back to how smoothly product moves.

We look at your products, workflow, operational goals, and growth trajectory to identify transport equipment that actually fits. That means pairing you with manufacturers and proven handling technology instead of guessing at a solution.

What We Evaluate

- Product size, weight, packaging, and how it needs to be oriented
- Target throughput and how accumulation and release should work
- Distance traveled, elevation changes, curves, merges, and diverts
- Where it fits into picking, packing, shipping, and replenishment
- Controls, sensors, guarding, operator access, and safety needs
- How it ties into WMS, WCS, robotics, sortation, and future volume

At a Glance

SOLUTION	WHERE IT FITS
Roller Conveyors	General carton and tote transport
Belt Conveyors	Varied product shapes needing gentle handling
Powered Roller Conveyors	High-throughput zones needing controlled flow
Gravity Conveyors	Docks and low-cost manual-flow areas
Pallet Conveyors	Heavy, automated pallet movement
Sortation Systems	Automated fulfillment and shipping lanes
Transfers & Conveyor Accessories	Connecting lines and handling directional changes
Custom Conveyor Solutions	Automated or space-constrained facilities



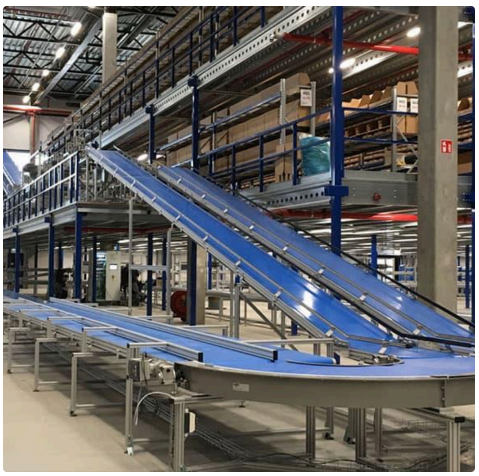



01



Roller Conveyors

A dependable, general-purpose way to move cartons, totes, pallets, and most other products from one point in your facility to another.

BEST FIT **General carton and tote transport**

- Handles cartons, totes, and pallets on the same platform type
- Available in gravity, line-shaft, and powered configurations
- Connects easily into curves, spurs, and inclines
- Lower cost and simpler maintenance than belt or motor-driven lines
- Common backbone for manual and semi-automated flow

Belt Conveyors

A continuous belt handles mixed product sizes and shapes gracefully, giving you smooth, steady transport from one workstation to the next.

BEST FIT **Varied product shapes needing gentle handling**

- Continuous surface supports irregular and small items
- Smoother handling than roller conveyor for fragile product
- Handles inclines and transitions roller beds struggle with
- Common at packing, inspection, and sortation induct points
- Fabric or modular belt options for different product types

02

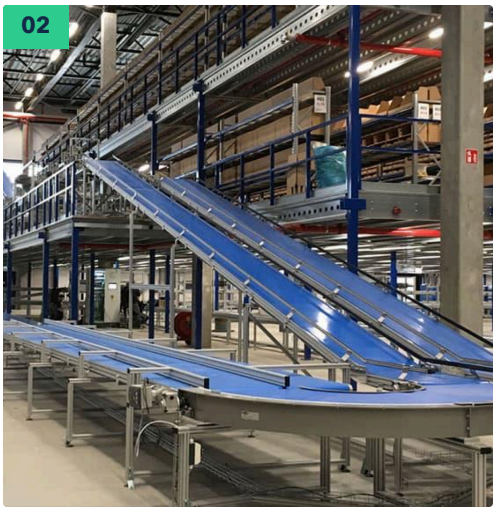

03



Powered Roller Conveyors

Motor-driven rollers push more volume through picking, packing, sorting, and shipping without leaning on manual labor to keep pace.

BEST FIT **High-throughput zones needing controlled flow**

- Continuous, motor-driven flow independent of gravity or push
- Zone controls manage accumulation and product spacing
- Scales into sensor-controlled and automated lines
- Reduces manual handling in high-volume zones
- MDR designs simplify maintenance versus line-shaft power

04



Gravity Conveyors

No motor required—gravity does the work, which keeps cost down and makes these a natural fit for loading docks and temporary setups.

BEST FIT **Docks and low-cost manual-flow areas**

- No motor, power hookup, or controls required
- Lowest cost per foot of any conveyor type
- Portable sections deploy quickly at docks and temporary zones
- Simple to reconfigure or relocate as needs change
- Common for trailer loading, unloading, and staging

Pallet Conveyors

Engineered for weight, these lines move heavy pallet loads safely between storage, production, and automated equipment.

BEST FIT **Heavy, automated pallet movement**

- Built to full pallet load ratings, not carton or tote weights
- Chain-driven and roller options depending on load and speed
- Common link between storage, palletizing, and wrapping equipment
- Feeds AS/RS and other automated storage systems directly
- Reduces forklift traffic in production and staging areas

05

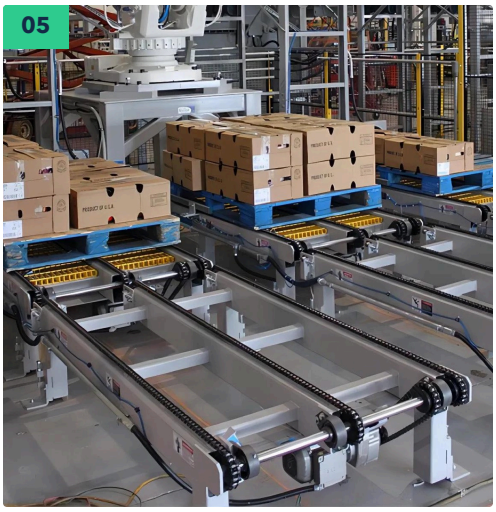

06

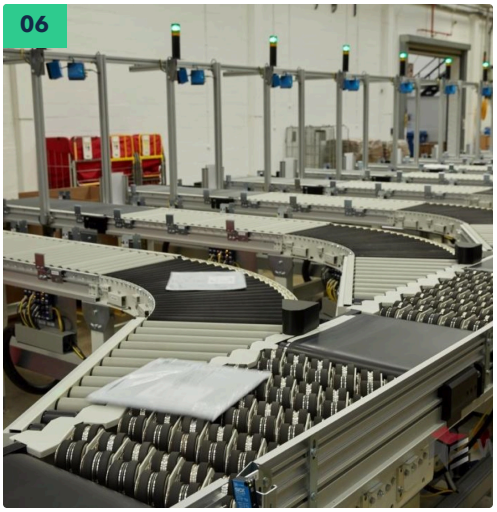

Sortation Systems

Products get routed to the correct destination automatically, which tightens order accuracy and takes labor out of the equation.

BEST FIT **Automated fulfillment and shipping lanes**

- Automatic, barcode-driven routing to the correct destination
- Multiple diverter types matched to volume and product mix
- Cuts manual sorting labor and routing errors
- Scales to high-volume fulfillment and shipping throughput
- Integrates with a WCS for real-time routing logic

07

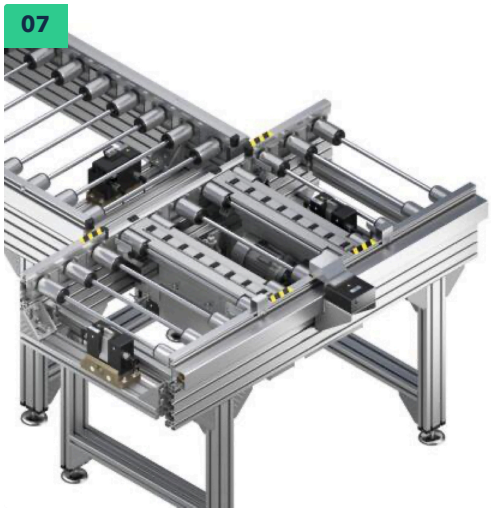

Transfers & Conveyor Accessories

Merges, diverts, lifts, turntables, and transfer units connect separate conveyor lines into one continuous flow.

BEST FIT **Connecting lines and handling directional changes**

- Merge and divert sections combine or split conveyor flow
- Vertical lifts move product between floor levels
- Turntables redirect product without manual repositioning
- Ties separate conveyor segments into one coordinated line
- Engineered around column spacing, ceiling height, and floor openings

Custom Conveyor Solutions

No two operations look alike. We design conveyor systems that work with your pallet rack, mezzanines, automation, robotics, and WCS as one complete warehouse solution rather than a bolt-on addition.

BEST FIT **Automated or space-constrained facilities**

- Engineered around existing rack, mezzanines, and building layout
- Coordinated with robotics and automation equipment
- Integrated with a warehouse control system for real-time routing
- Combines multiple conveyor types into one continuous line
- Built as part of a complete material flow plan, not a standalone add

08



NOT SURE WHICH FITS?

We'll Help You Compare

The right choice depends on your product, your throughput, and how your team works. Tell us about your facility and we'll help you weigh the options before anything is locked in.

jterry@twinpickrack.com | +1 (408) 505-9770

HOW A PROJECT COMES TOGETHER

From First Walkthrough to a Plan You Can Build

Your products, throughput, routing, labor, safety, and integration needs come first—the conveyor type gets picked after, not before.

1

Assess

Log product characteristics, throughput, workflows, travel paths, labor constraints, controls, and growth targets.

2

Compare

Weigh conveyor technologies and manufacturers on speed, load, control, upkeep, budget, and lifecycle cost.

3

Integrate

Fit the chosen system into sortation, controls, WMS/WCS, robotics, workstations, guarding, and installation.

THE FULL PORTFOLIO

One Partner for the Whole Warehouse

Storage Systems 13 systems	**Conveyors & Transport** 8 conveyor types	**Mezzanines & Platforms** 8 solutions
Doors, Access & Controls 10 solutions	**Dock Equipment** 4 dock solutions	**Warehouse Safety** 8 safety solutions
Automation 4 technologies	**Advanced Lifts** 7 lift families	**Product Deployment** 8 services

MOVE FORWARD WITH CONFIDENCE

Let's Talk About Your Conveyors & Transport Project

Tell us about your facility, your product, and where your operation is headed—we'll help you work out which system fits and how to get it installed and running.

EMAIL
jterry@twinpickrack.com

PHONE
+1 (408) 505-9770

WEB
twinpickrack.com

ADDRESS
12820 Adam's Rd, PMB 108, Granger, IN 46530